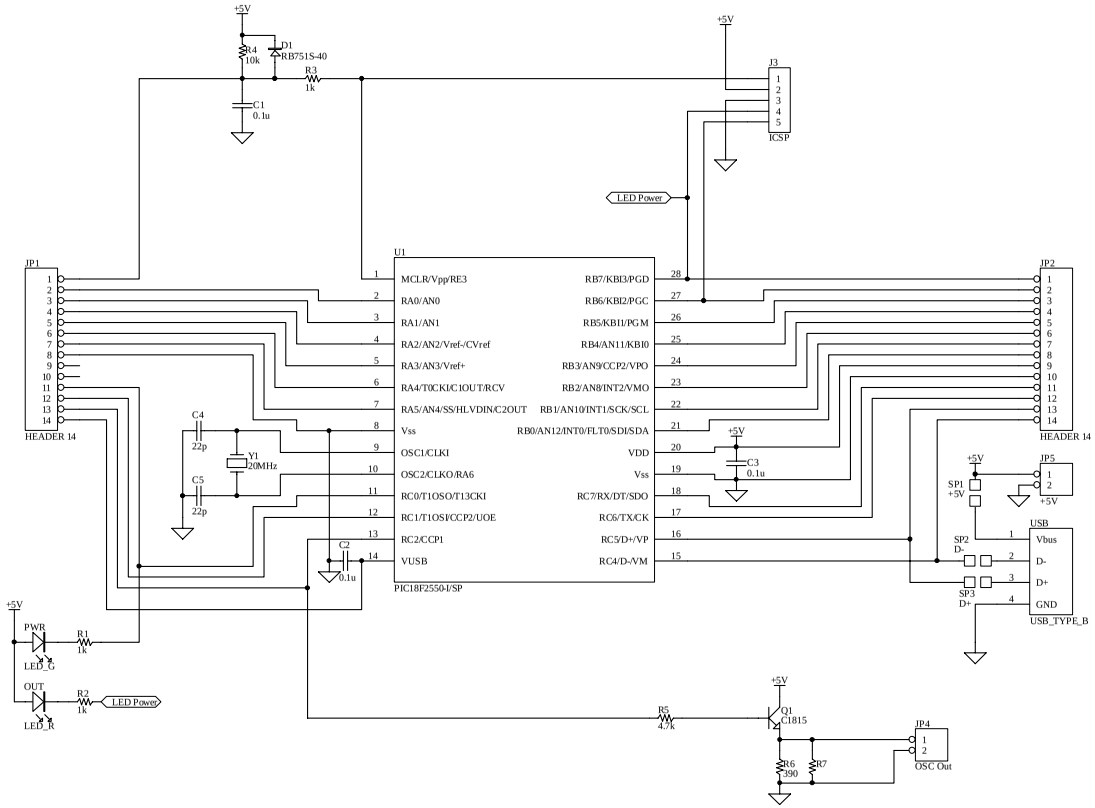

Title		
Size A3	Number	Revision
Date: 24-Apr-2009		Sheet of
File: D:\ProtelDB\PIC_OSC\2009_01_21\Pic18f2550.Schdoc		Drawn By: